iCT

PA7/PV7

Bill Acceptor
Installation Guide

under cover 1, 2, 3, 4 off
for CM

---

pog 1, 3 on under cover

International Currency Technologies Corp.

PA7-U/PV7 Option Switch Settings: 1

Supported bill US$ 1, 5, 10, 20, 50, 100 6bills.

PA7-U/PV7 dip-switch settings and functions:

	FUNCTION	SW1	SW2	SW3	SW4	SW5	SW6	SW7	SW8	SW1	SW2	SW3	SW4
	Reject US$ 1	ON											
★	Accept US$ 1	OFF											
	Reject US$ 5		ON										
★	Accept US$ 5		OFF										
	Reject US$ 10			ON									
★	Accept US$ 10			OFF									
	Reject US$ 20				ON								
★	Accept US$ 20				OFF								
	Reject US$ 50 & 100					ON							
★	Accept US$ 50 & 100					OFF							
	Manufacture Default						ON						
★	System Default						OFF						
	Harness Disable							ON					
★	Harness Enable							OFF					
	Inhibit Active High								ON				
★	Inhibit Active Low								OFF				
★	1 pulse / US$ 1									OFF	OFF		
	2 pulse / US$ 1									ON	OFF		
	4 pulse / US$ 1									OFF	ON		
	20 pulse / US$ 1									ON	ON		
★	Pulse Speed	50ms on / 50ms off										OFF	OFF
		60ms on / 300ms off										ON	OFF
		30ms on / 50ms off										OFF	ON
		150ms on / 150ms off										ON	ON

★ Manufacture setting

◈ Note : (1) Reset the bill acceptor after setting the dip switch.

(2) SW7 and SW8 of the 8-switch DIP and the 4-switch DIP are for pulse protocol only.

Dow

Remove the front cover and the dip-switch is on the CPU board.

PA7-U Interface Settings: 2 (Pulse) 1, 3 on

	INTERFACE	SW1	SW2	SW3	SW4
★	Credit-Pulse Normal HIGH	ON			
	Credit-Pulse Normal LOW	OFF			
★	Pulse Mode		ON	ON	
	NISR Mode		OFF	ON	
	RS232 Mode (RS232 Port / USB Port)		ON	OFF	
	5V Enable Mode		OFF	OFF	
	Reserved				ON
★					OFF

★ Manufacture setting

PA7-U Interface Settings: 3 (NISR)

	INTERFACE	SW1	SW2	SW3	SW4
★	Reserved	ON			
		OFF			
	Pulse Mode		ON	ON	
★	NISR Mode		OFF	ON	
	RS232 Mode (RS232 Port / USB Port)		ON	OFF	
	5V Enable Mode		OFF	OFF	
	Reserved				ON
★					OFF

★ Manufacture setting

PA7-U Interface Settings: 4 (RS232)

	INTERFACE	SW1	SW2	SW3	SW4
★	Reserved	ON			
		OFF			
	Pulse Mode		ON	ON	
	NISR Mode		OFF	ON	
★	RS232 Mode (RS232 Port / USB Port)		ON	OFF	
	5V Enable Mode		OFF	OFF	
	Reserved				ON
★					OFF

★ Manufacture setting

PA7-U Interface Settings: 5 (5V Enable)

	INTERFACE	SW1	SW2	SW3	SW4
★	Credit-Pulse Normal HIGH	ON			
	Credit-Pulse Normal LOW	OFF			
	Pulse Mode		ON	ON	
	NISR Mode		OFF	ON	
	RS232 Mode (RS232 Port / USB Port)		ON	OFF	
★	5V Enable Mode		OFF	OFF	
	Reserved				ON
★					OFF

★ Manufacture setting

PV7 Interface Settings: 2 (Pulse)

	INTERFACE	SW1	SW2	SW3	SW4
★	Credit-Pulse Normal HIGH	ON			
	Credit-Pulse Normal LOW	OFF			
★	Pulse Mode		ON	ON	
	MDB Mode		OFF	ON	
	RS232 Mode		ON	OFF	
	Reserved				ON
★					OFF

★ Manufacture setting

PV7 Interface Settings: 3 (MDB)

	INTERFACE	SW1	SW2	SW3	SW4
★	Reserved	ON			
		OFF			
	Pulse Mode		ON	ON	
★	MDB Mode		OFF	ON	
	RS232 Mode		ON	OFF	
★	Credit Converting Mode 1 (Note.A)				ON
	Credit Converting Mode 2 (Note.B)				OFF

★ Manufacture setting

◈ (Note. A) Mode 1: To output the credit which is the same as the input bill.

(Note. B) Mode 2: To output the credit which is 1/10 of the input bill.

PV7 Interface Settings: 4 (RS232)

	INTERFACE	SW1	SW2	SW3	SW4
★	Reserved	ON			
		OFF			
	Pulse Mode		ON	ON	
	MDB Mode		OFF	ON	
★	RS232 Mode		ON	OFF	
	Reserved				ON
★					OFF

★ Manufacture setting

all blue off (up)

© 2006 International Currency Technologies Corporation
V. 7.0 Part Number : SWB5US670-R

PA7-U/PV7 Option Switch Settings: 1

Supported bill US$ 1, 5, 10, 20, 50, 100 6bills.

PA7-U/PV7 dip-switch settings and functions:

	FUNCTION	SW1	SW2	SW3	SW4	SW5	SW6	SW7	SW8	SW1	SW2	SW3	SW4
	Reject US$ 1	ON											
★	Accept US$ 1	OFF											
	Reject US$ 5		ON										
★	Accept US$ 5		OFF										
	Reject US$ 10			ON									
★	Accept US$ 10			OFF									
	Reject US$ 20				ON								
★	Accept US$ 20				OFF								
	Reject US$ 50 & 100					ON							
★	Accept US$ 50 & 100					OFF							
	Manufacture Default						ON						
★	System Default						OFF						
	Harness Disable							ON					
★	Harness Enable							OFF					
	Inhibit Active High								ON				
★	Inhibit Active Low								OFF				
★	1 pulse / US$ 1									OFF	OFF		
	2 pulse / US$ 1									ON	OFF		
	4 pulse / US$ 1									OFF	ON		
	20 pulse / US$ 1									ON	ON		
★	Pulse Speed	50ms on / 50ms off										OFF	OFF
		60ms on / 300ms off										ON	OFF
		30ms on / 50ms off										OFF	ON
		150ms on / 150ms off										ON	ON

★ Manufacture setting

◈ Note : (1) Reset the bill acceptor after setting the dip switch.

(2) SW7 and SW8 of the 8-switch DIP and the 4-switch DIP are for pulse protocol only.

Contents

1. Introduction 1
1-1. Overview 1
1-2. Features 1
2. Specifications 1
Common 1
Electrical 1
Mechanical 1
3. Packing List 2
4. Dimension 2
5. Installation 3
5-1. Harness Application 3
5-1-1. I/O Circuit 17
5-2. DIP Switch Setting 21
5-3. Software Download and Upgrade 22
6. Maintenance 23
7. Trouble shooting 24

1. Introduction

1-1. Overview

PA7/PV7 is a bill acceptor which features as high-security with acceptance rate up to 96% or even greater.

1-2. Features

- Four way bill insertion acceptance.
- Auto-calibrating.
- Easy Maintenance.

2. Specifications

Common

Acceptance Rate

96% or greater

Identification Speed

Approx. 3 seconds to stack

Installation

Indoor

Bill Insertion

Four way acceptance

Interface

PA7/PA7-U: Pulse, ICT Protocol
NISR, 5V ENABLE

PV7: MDB, Pulse, ICT Protocol

❖ **USB is only compatible with model PA7-UXXXX-XXXX.**

Electrical

Power Source

12V DC, 3Amp
34V DC(24V~45V), 1.5Amp
117V AC, 0.2Amp

Power Consumption

Standby: 200~350mA
Operation Current: 850~900mA
Transient Current: 1.2A/ms
Motor Lock: 1.5A maximum

Operation Environment

Operation Temperature: 0°C~55°C
Storage Temperature: -30°C~70°C
Humidity: 30%~85RH (no condensation)

Mechanical

Bill Capacity

Approx. 400 bills (300~400)
500 bills (400~500)
800 bills (700~800)

Weight

<1.3kg

Outline Dimension

See Page.2

3. Packing List

Main	Accessory
Bill Acceptor	Harnesses: see **5-1** PA7/PV7 Installation Guide PA7/PV7 Switches Setting Guide

4. Dimension

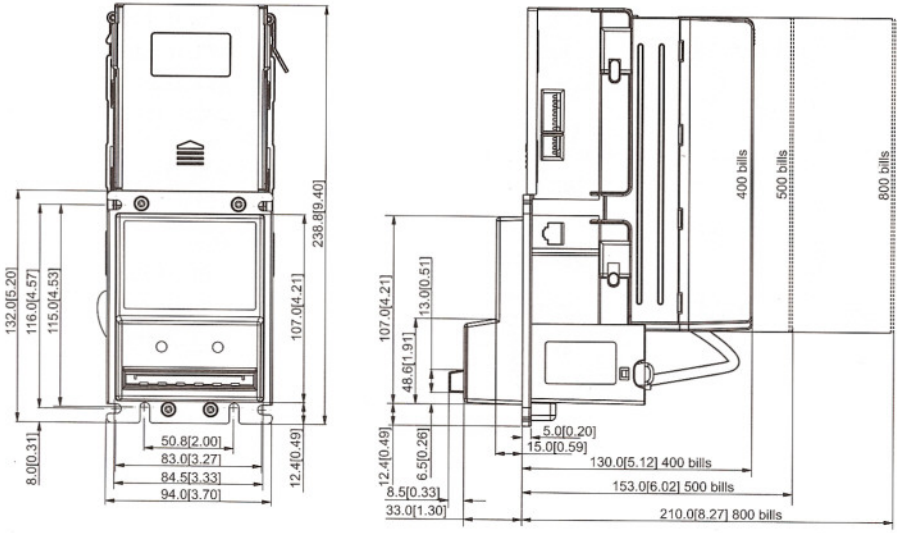

Unit : mm[inch]

5. Installation

5-1. Harness Application

PA7/PV7 Bill Acceptor:

Model	Interface		Used Voltage	Usage	Harness	Page
PA7/PA7-U	Pulse		12VDC	Power & *Data Com.	WEL-RM007	4
				Extension Wire	CU-R961-1	5
			117VAC	Power & Data Com.	WEL-RM008	6
				Extension Wire	WEL-RM010	7
				Extension Wire	WEL-RM012	8
	Pulse + 5V Enable		117VAC	Power & Data Com.	WEL-RM017	9
				Extension Wire	WEL-RM018	10
	NISR		117VAC	Power & Data Com.	WEL-RM013	11
	ICT Protocol	RS232	12V DC	Power	WEL-RM007	12
			117V AC	Power	WEL-RM008	12
			+5V to ±12V	Data Com.	WEL-RV706	12
		**USB	12V DC	Power	WEL-RM007	12
			117V AC	Power	WEL-RM008	12
			5V DC	Data Com.	WEL-RU1180 (Optional)	12
PV7	Pulse		12V DC	Power & Data Com.	WEL-RV701	13
				Extension Wire	CU-R961-1	5
			24V AC	Power & Data Com.	WEL-RV703	14
				Extension Wire	WEL-RV702	14
	MDB		34V DC	Power & Data com.	WEL-RM006	15
	ICT Protocol (RS232)		12V DC	Power	WEL-RV701	12
			24V AC	Power	WEL-RV703	12
			34V DC	Power	WEL-RM006	12
			+5V to ±12V	Data Com.	WEL-RV706	12

***Data Com. : Data Communication.**

****USB is only compatible with model PA7-UXXXX-XXXX.**

WEL-RM007

(Pulse, ICT Protocol / 12VDC)

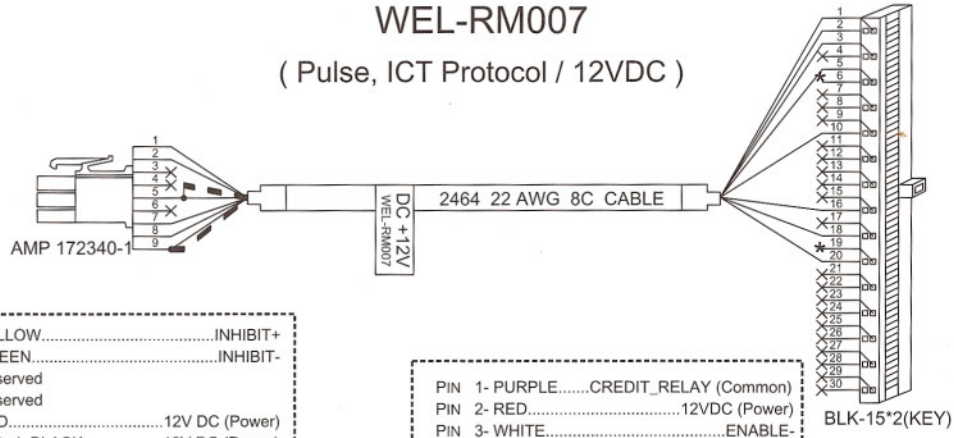

PIN 1- YELLOW.....INHIBIT+
PIN 2- GREEN.....INHIBIT-
PIN 3- Reserved
PIN 4- Reserved
PIN 5- RED.....12V DC (Power)
PIN 5 Dotted- BLACK.....12V DC (Power)
PIN 6- Reserved
PIN 7- BLUE.....CREDIT_RELAY (N.O.)
PIN 8- PURPLE.....CREDIT_RELAY (Common)
PIN 9- BROWN.....GND (Power)
PIN 9 Dotted- WHITE.....GND (Power)

PIN 1- PURPLE.....CREDIT_RELAY (Common)
PIN 2- RED.....12VDC (Power)
PIN 3- WHITE.....ENABLE-
PIN 5- YELLOW.....INHIBIT+
PIN 10- BROWN.....GND (Power)
PIN 16- BLUE.....CREDIT_RELAY (N.O.)
PIN 18- BLACK.....ENABLE+
PIN 20- GREEN.....INHIBIT-

CU-R961-1

(Pulse / 12VDC)

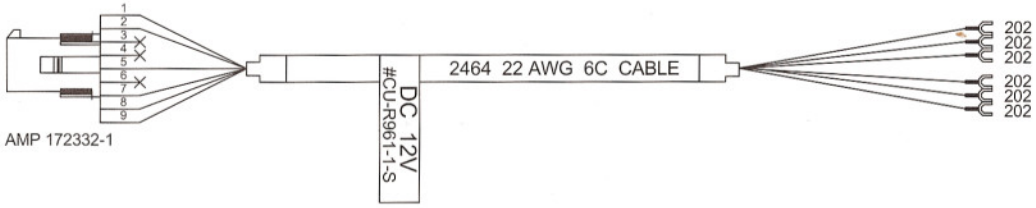

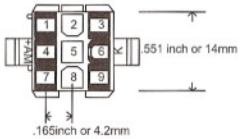

AMP 172332-1 BACK VIEW

PIN 1- YELLOW.....INHIBIT+
PIN 2- GREEN.....INHIBIT-
PIN 5- RED.....+12VDC(POWER-IN)
PIN 7- BLUE.....CREOIT-RELAY-NO
PIN 8- PURPLE.....CREDIT-RELAY-COM
PIN 9- ORANGE.....GND(POWER-IN)

WEL-RM008

(Pulse, ICT Protocol / 117VAC)

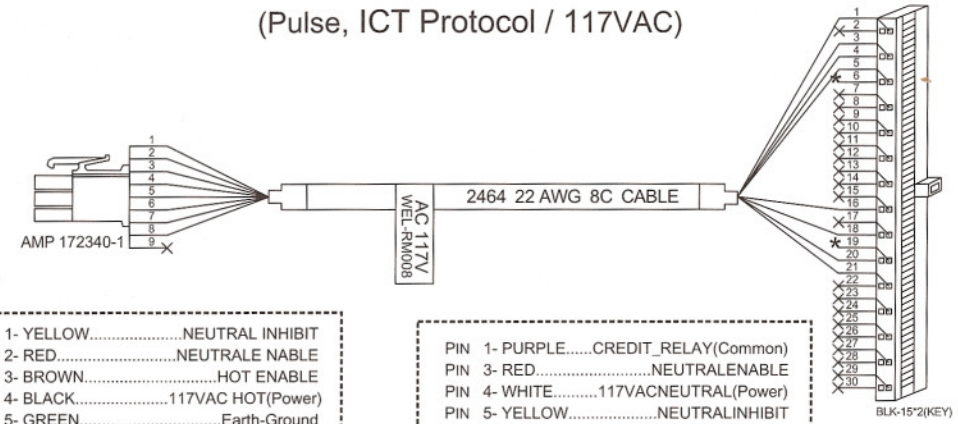

PIN 1- YELLOW.....NEUTRAL INHIBIT
PIN 2- RED.....NEUTRALE NABLE
PIN 3- BROWN.....HOT ENABLE
PIN 4- BLACK.....117VAC HOT(Power)
PIN 5- GREEN.....Earth-Ground
PIN 6- WHITE.....117VAC NEUTRAL(Power)
PIN 7- BLUE.....CREDIT_RELAY(N.O.)
PIN 8- PURPLE.....CREDIT_RELAY(Common)
PIN 9- Reserved

PIN 1- PURPLE.....CREDIT_RELAY(Common)
PIN 3- RED.....NEUTRALENABLE
PIN 4- WHITE.....117VACNEUTRAL(Power)
PIN 5- YELLOW.....NEUTRALINHIBIT
PIN 16- BLUE.....CREDIT_RELAY(N.O.)
PIN 18- BROWN.....HOTENABLE
PIN 20- BLACK.....117VACHOT(Power)
PIN 21- GREEN.....EARTHGROUND

WEL-RM010

(Pulse / 117 VAC)

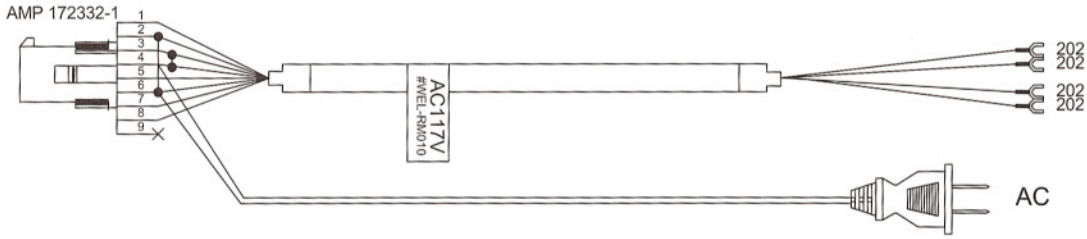

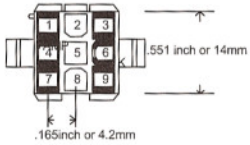

AMP 172332-1 BACK VIEW

PIN 1- YELLOW.....NEUTRAL INHIBIT
PIN 2- RED.....NEUTRAL ENABLE
PIN 3- ORANGE.....HOT ENABLE
PIN 4- BLACK.....117VAC HOT (Power)
PIN 5- GREEN.....Earth -Ground
PIN 6- BLACK.....117VAC NEUTRAL (Power)
PIN 7- BLUE.....CREDIT_RELAY (N.O.)
PIN 8- PURPLE.....CREDIT_RELAY (Common)
PIN 9- Reserved

YELLOW.....NEUTRAL INHIBIT
GREEN.....Earth - Ground
BLUE.....CREDIT_RELAY (N.O.)
PURPLE.....CREDIT_RELAY (Common)

WEL-RM012

(Pulse / 117 VAC)

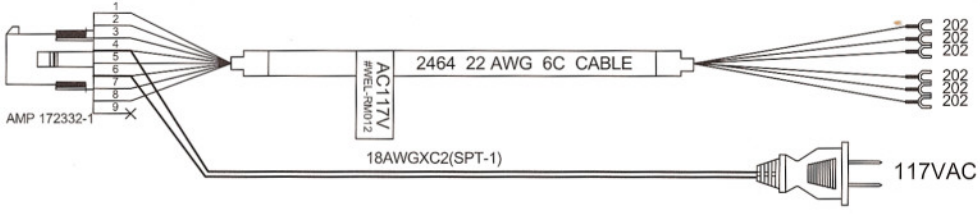

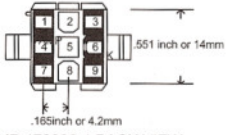

AMP 172332-1 BACK VIEW

PIN 1- YELLOW.....NEUTRAL INHIBIT+
PIN 2- RED.....NEUTRAL INHIBIT-
PIN 3- ORANGE.....HOT ENABLE
PIN 4- BLACK.....17VAC HOT (Power)
PIN 5- GREEN.....Earth - Ground
PIN 6- BLACK.....117VAC NEUTRAL (Power)
PIN 7- BLUE.....CREDIT_RELAY (N.O.)
PIN 8- PURPLE....CREDIT_RELAY (Common)
PIN 9- Reserved

YELLOW.....NEUARAL INHIBIT+
RED.....NEUTRAL INHIBIT-
ORANGE.....HOT ENABLE
GREEN.....Earth - Ground
BLUE.....CREDIT_RELAY (N.O.)
PURPLE.....CREDIT_RELAY (Common)

WEL-RM017

(Pulse + 5V Enable / 117VAC)

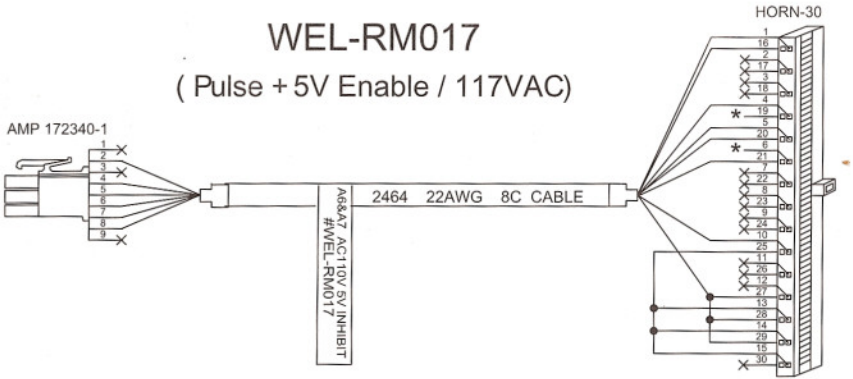

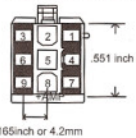

AMP 172340-1 BACK VIEW

PIN 2- RED.....I-ENABLE-L
PIN 4- BLACK.....117VAC-HOT
PIN 5- GREEN.....EARTH-GROUND
PIN 6- WHITE & YELLOW.....117VAC-NEUTRAL
PIN 7- BLUE.....CREDIT-RELAY-NO
PIN 8- PURPLE & BROWN.....CREDIT-RELAY-COM

PIN 1- PURPLE.....CREDIT-RELAY-COM
PIN 4- WHITE.....117VAC-NEUTRAL(POWER IN)
PIN 5- YELLOW.....NEUTRAL-INHIBIT
PIN 10- BROWN.....GND
PIN 16- BLUE.....CREDIT-RELAY-NO
PIN 20- BLACK.....117VAC-HOT(POWER IN)
PIN 21- GREEN.....EARTH-GROUND
PIN 27.& 28. & 29- RED.....I-ENABLE-L
PIN 13. & 14. & 15. & 25- BLACK.....I-ENABLE-H

WEL-RM018

(Pulse + 5V Enable / 117VAC)

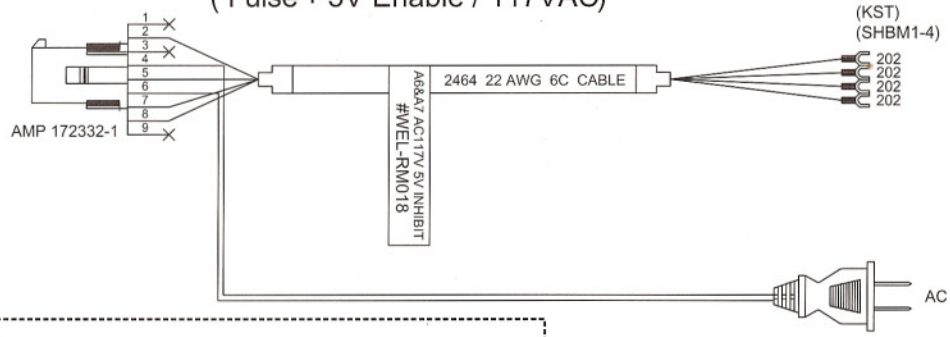

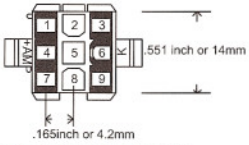

AMP 172332-1 BACK VIEW

PIN 2- RED.....I-ENABLE-L
PIN 4- BLACK.....117VAC-HOT(POWER-IN)
PIN 5- GREEN.....EARTH-GROUND
PIN 6- BLACK.....117VAC-NEUTRAL(POWER-IN)
PIN 7- BLUE.....CREDIT-RELAY-NO
PIN 8- PURPLE.....CREDIT-RELAY-COM

WEL-RM013

(NISR / 117V AC)

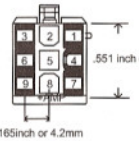

AMP 172340-1 BACK VIEW

PIN 4- WHITE.....117V AC HOT(Power)
PIN 6- PURPLE.....117V AC NEUTRAL(Power)

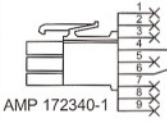

AMP 172340-1

ONLY 117VAC
#WEL-RM013

4C CABLE

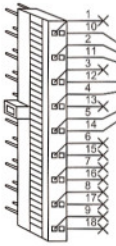

BLK2*9

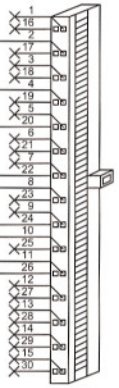

BLK-30P

PIN 2- BLUE...../INTERRUPT
PIN 4- BLACK.....GND
PIN 5- YELLOW...../DATA
PIN 10- WHITE / BLACK...../OUT_OF_SERVICE
PIN 11- BLUE / BLACK.....Reserved
PIN 12- GREEN...../ACCEPT_ENABLE
PIN 14- YELLOW/BLACK...../SEND

PIN 2- BLUE / BLACK.....Reserved
PIN 4- PURPLE.....117V AC NEUTRAL(Power)
PIN 8- BLUE...../INTERRUPT
PIN 10- BLACK.....GND
PIN 11- YELLOW...../DATA
PIN 20- WHITE.....117V AC HOT(Power)
PIN 22- WHITE / BLACK...../OUT_OF_SERVICE
PIN 24- GREEN...../ACCEPT_ENABLE
PIN 26- YELLOW/BLACK...../SEND

WEL-RU1180

(USB <Optional> / 5VDC)

USB-A-TYPE

USB-B-TYPE

USB-A BACK VIEW

PIN 1- RED.....VCC
PIN 2- WHITE.....D-
PIN 3- GREEN.....D+
PIN 4- BLACK.....GND

USB-B BACK VIEW

PIN 1- RED
PIN 2- WHITE
PIN 3- GREEN
PIN 4- BLACK

WEL-RV706

(ICT Protocol <RS232> / +5VDC to ±12VDC)

PIN 1- Reserved
PIN 2- RXD
PIN 3- TXD
PIN 4- Reserved
PIN 5- GND
PIN 6- Reserved
PIN 7- Reserved
PIN 8- Reserved
PIN 9- Reserved

D-SUB(F)

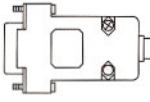

26 AWG 6C PHONE CABLE

RJ-45

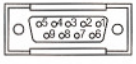

D-SUB 9F TOP VIEW

RJ-45 VIEW

PIN 1- BLUE.....GND
PIN 2- YELLOW.....TX22
PIN 3- GREEN.....RX22
PIN 5- Reserved
PIN 6- Reserved
PIN 6- RED.....VCC
PIN 7- BLACK.....RX11
PIN 8- WHITE.....TX11

WEL-RV701

(Pulse, ICT Protocol <RS232> / 12VDC)

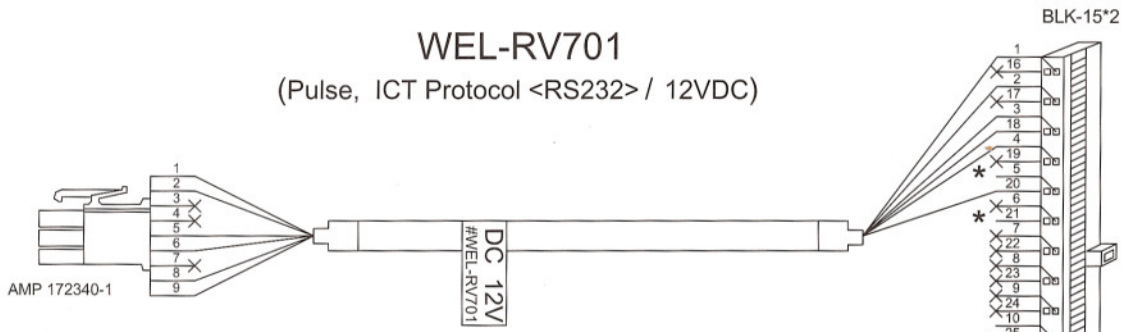

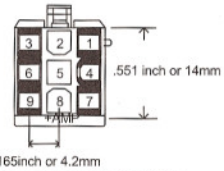

AMP 172340-1 BACK VIEW

PIN 1- YELLOW.....INHIBIT+
PIN 2- GREEN.....INHIBIT
PIN 3- Reserved
PIN 4- Reserved
PIN 5- RED.....12V DC (POWER
PIN 6- Reserved
PIN 7- BLUE.....CREDIT_RELAY (N.O.)
PIN 8- PURPLE.....CREDIT_RELAY (Common)
PIN 9- ORANGE.....GND (POWER)

PIN 1- PURPLE.....CREDIT_RELAY (Common)
PIN 2- BLUE.....CREDIT_RELAY (N.O.)
PIN 3- RED.....12VDC (POWER)
PIN 4- YELLOW.....INHIBIT+
PIN 18- GREEN.....INHIBIT
PIN 20- ORANGE.....GND (POWER)

WEL-RV703

(Pulse, ICT Protocol <RS232> / 24VAC)

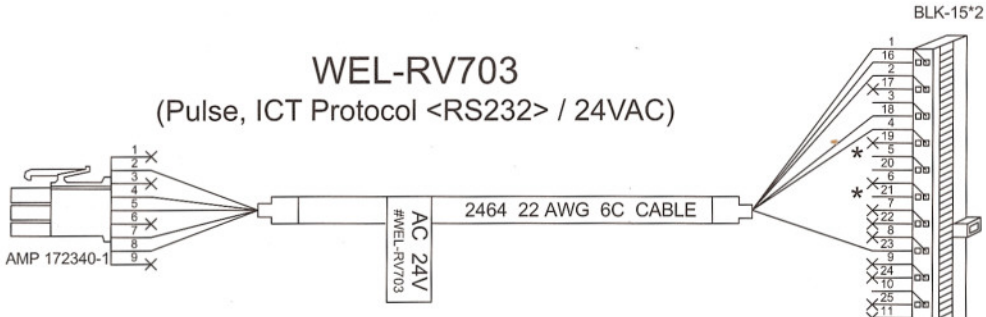

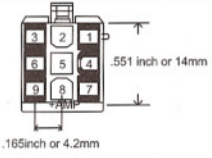

AMP 172340-1 BACK VIEW

PIN 1- Reserved
PIN 2- YELLOW.....INHIBIT+
PIN 3- Reserved
PIN 4- BLUE.....CREDIT_RELAY (N.O.)
PIN 5- PURPLE&GREEN.....CREDIT_RELAY (Common)
PIN 5- INHIBIT-
PIN 6- Reserved
PIN 7- ORANGE.....24V AC (RET)
PIN 8- RED.....24V AC (HOT)
PIN 9- Reserved

PIN 1- PURPLE.....CREDIT_RELAY (Common)
PIN 2- BLUE.....CREDIT_RELAY (N.O.)
PIN 4- YELLOW.....INHIBIT+
PIN 16- ORANGE.....24V AC (RET)
PIN 18- GREEN.....INHIBIT
PIN 23- RED.....24V AC (HOT)

WEL-RV702

(Pulse / 24VDC)

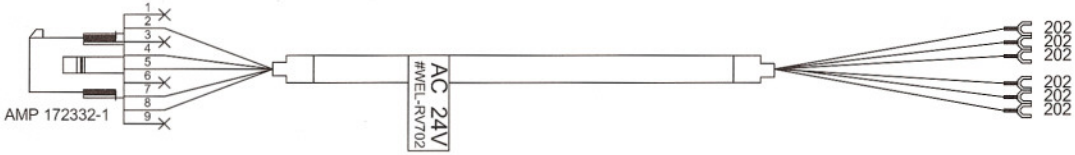

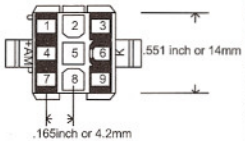

AMP 172332-1 BACK VIEW

PIN 1- Reserved
PIN 2- YELLOW.....INHIBIT+
PIN 3- Reserved
PIN 4- BLUE.....CREDIT_RELAY (N.O.)
PIN 5- PURPLE&GREEN.....CREDIT_RELAY (Common)
PIN 5- PURPLE&GREEN.....INHIBIT-
PIN 6- Reserved
PIN 7- ORANGE.....24V AC (RET)
PIN 8- RED.....24V AC (HOT)
PIN 9- Reserved

YELLOW.....INHIBIT+
BLUE.....CREDIT_RELAY (N.O.)
PURPLE.....CREDIT_RELAY (Common)
GREEN.....CREDIT_RELAY (Common)
ORANGE.....24V AC (RET)
RED.....24V AC (HOT)

WEL-RM006

(MDB, ICT Protocol <RS232> / 34VDC)

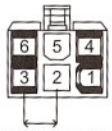

.163inch or 4.14 mm

MOLEX 5557-6R BACK VIEW

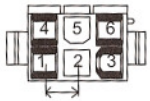

.163or4.14

MOLEX 5559-06P BACK VIEW

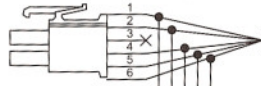

MOLEX 5557-6R

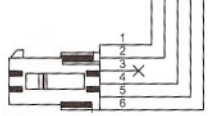

MOLEX 5559-06P

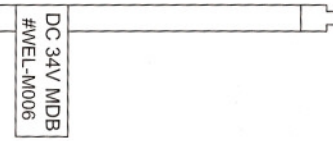

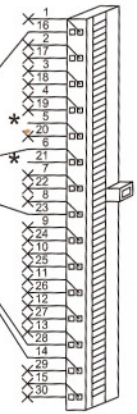

PIN 1- BLUE.....34VDC
PIN 2- YELLOW.....34VDC Power Return
PIN 3- N/C
PIN 4- ORANGE.....Master Receive
PIN 5- RED.....Master Transmit
PIN 6- GREENC.....ommunications Common

PIN 6- ORANGE.....Master Receive
PIN 14- RED.....Master Transmit
PIN 16- YELLOW.....34VDC Power Return
PIN 23- BLUE.....34VDC
PIN 28- GREEN.....Communications Common

5-1-1. I/O Circuit

Pulse Interface Customer Recommend Circuit.

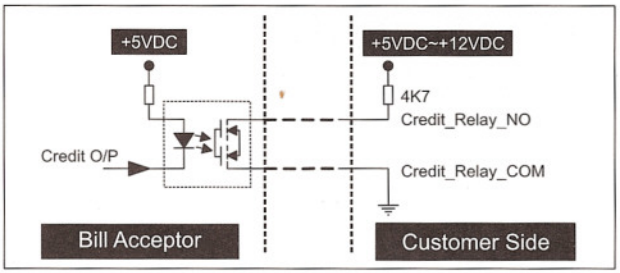

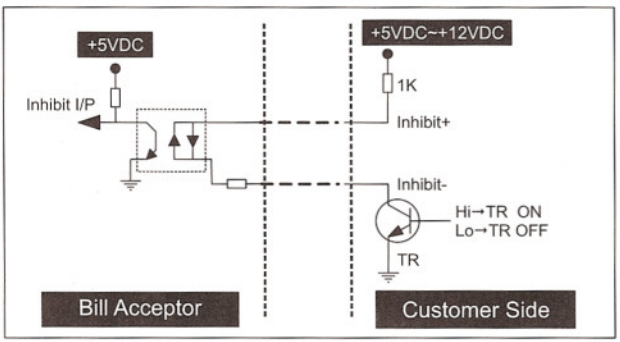

ICT Protocol Interface Customer Recommend Circuit.

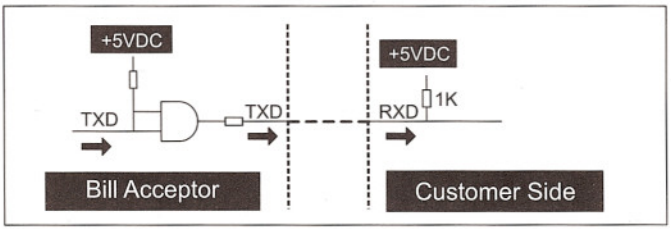

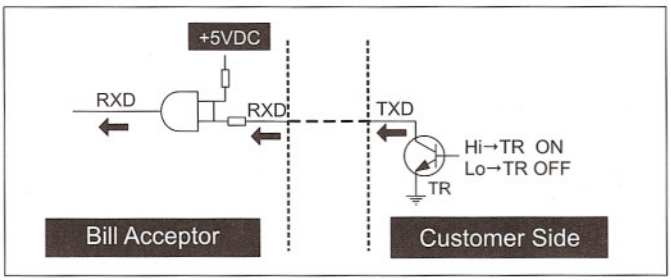

5V Enable Interface Customer Recommend Circuit.

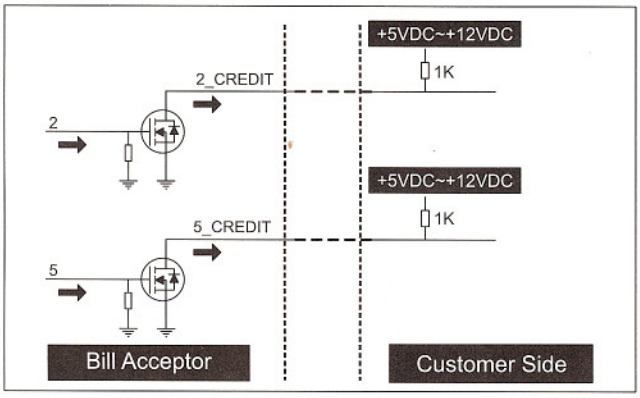

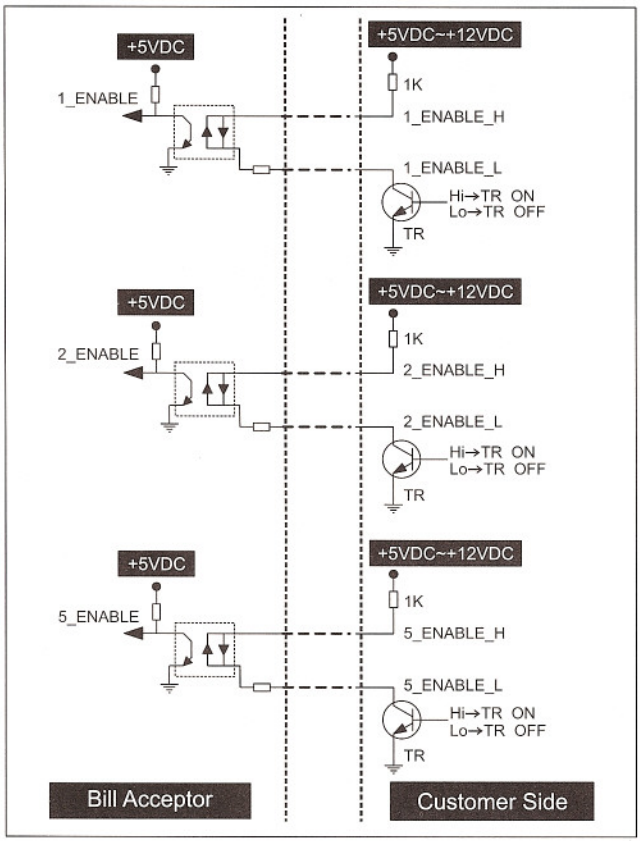

NISR Interface Customer Recommend Circuit.

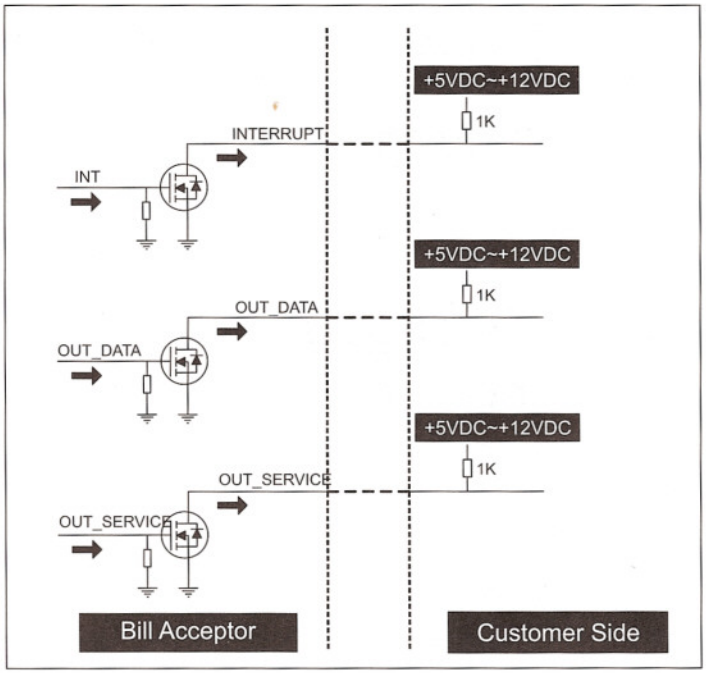

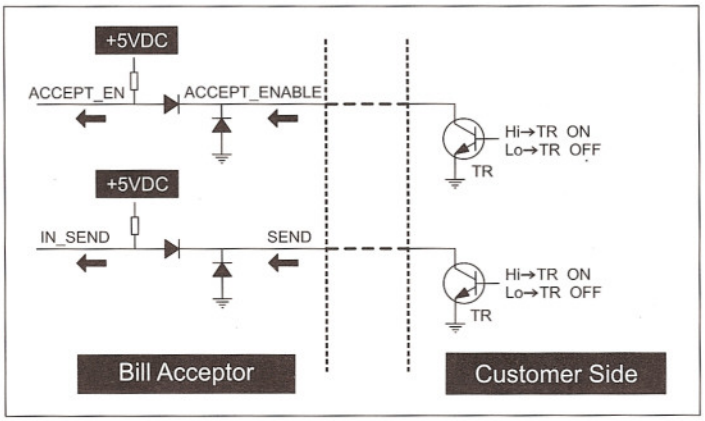

MDB Interface Customer Recommend Circuit.

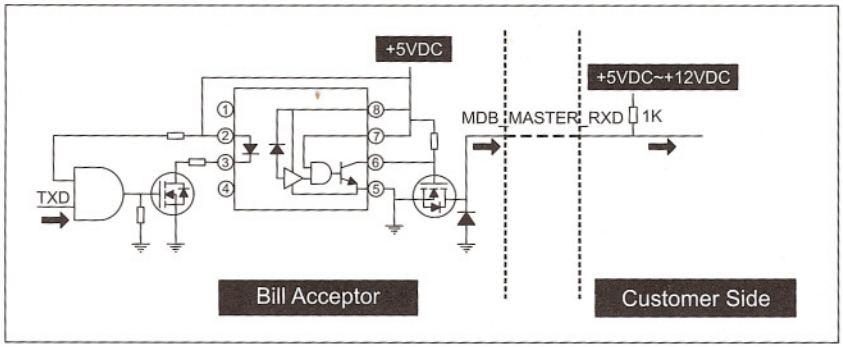

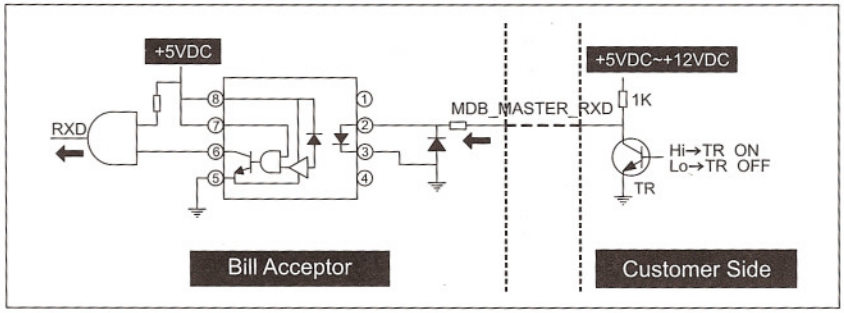

5-2. DIP Switch Setting

There are two serial DIP switches which are located on the side of PA7/PV7. **(as figure 1)** According to different currencies which are used by users, DIP switch settings could be varied to fit users' need. Besides, there's also a serial DIP switches on CPU board inside of PA7/PV7 for interface settings. **(as figure 2)**

Please refer to "PA7/PV7 DIP Switch Setting" Guide in the package for more detail.

figure 1

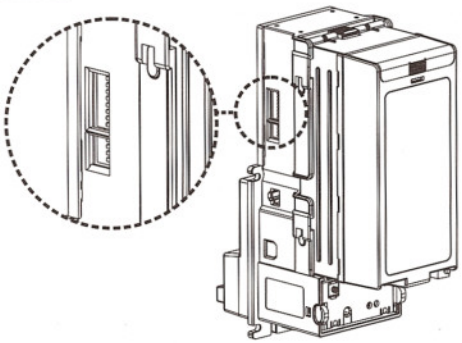

figure 2

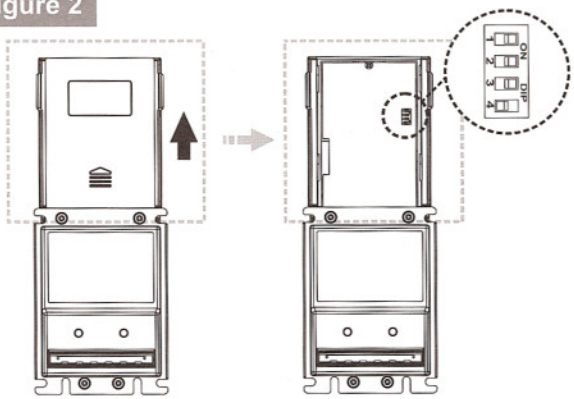

5-3. Software Download and Upgrade

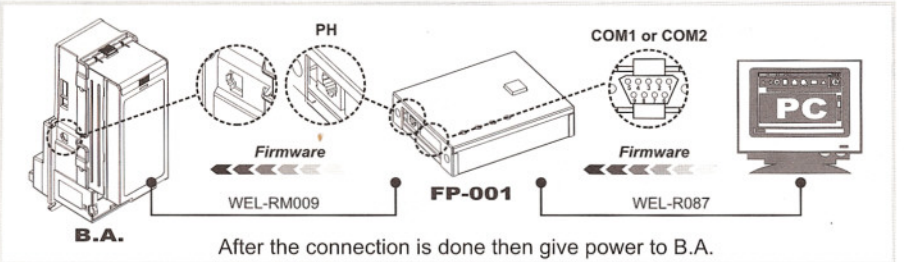

1. Connect PC to PA7/ PV7, switch FP-001 to L2 Program mode Power ON, and then press Reset button.

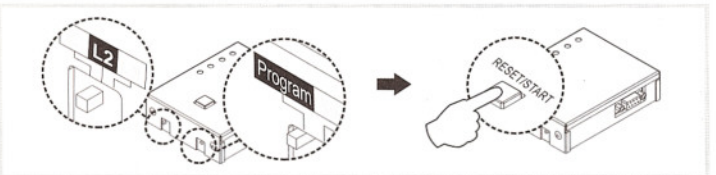

2. Start FW16.EXE, and then choose:
   CPU : MB90F549
   Speed: 16MHz
   COM : COM port which is connected to FP-001.
3. Click Auto (A) to start to download.
4. Shut down software after downloading.

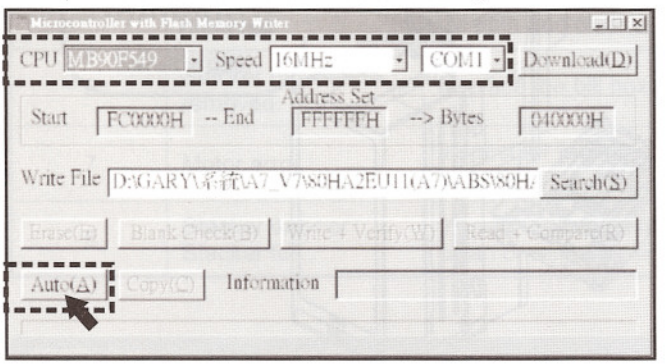

Please contact ICT to purchasing FP-001 download box.

6. Maintenance

To make sure the bill acceptor always works smoothly, please clean the internal parts regularly.

To clean the internal parts:

1. Press the buttons on the sides of upper base and pull the unit out.

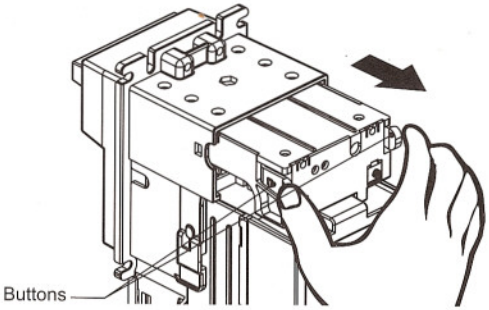

2. Use a soft, dry cloth or towel to clean the bill path and LED/sensor.

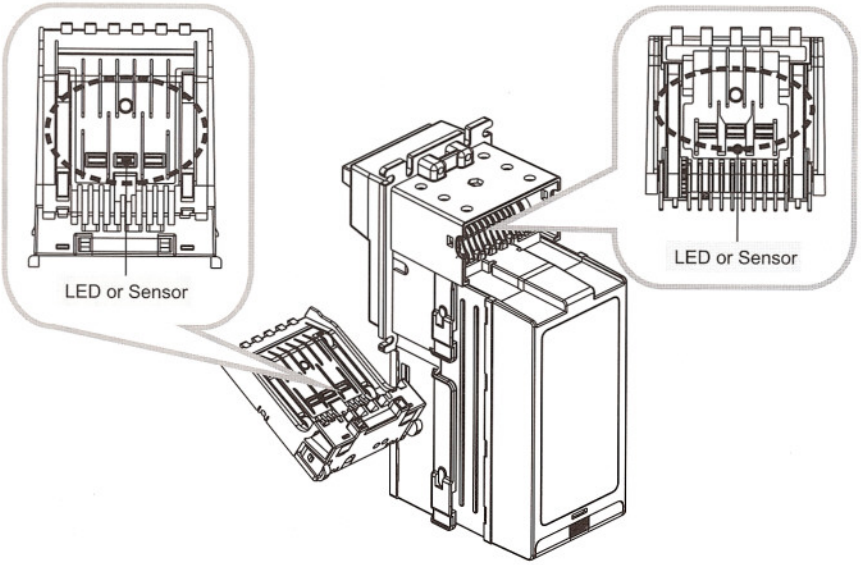

Do not use an organic solvent such as gasoline or paint thinner to clean the unit.

7. Troubleshooting

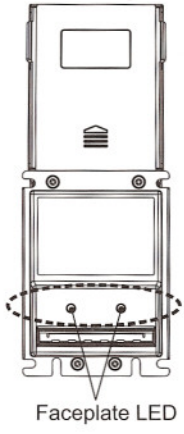

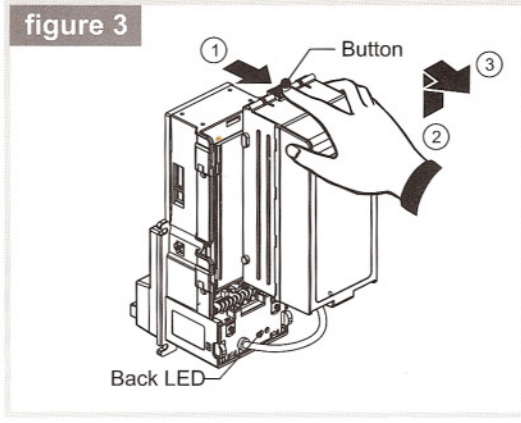

LED Flashes	Status	Corrective Actions
1	Bill jammed.	Remove the bill box by sliding the top button **(as figure 3)** and the bill path unit, and then remove the jammed bill.
2	Inhibit on.	Inspect for right DIP switch settings.
3	Sensor error.	Inspect for foreign objects on sensor and hook then clean.
4	Stringing attempt has detected.	Inspect for foreign objects on sensor or bill path and clean.
5	Stacker has been removed.	Replace the bill box.
7	Motor error.	Inspect for foreign objects on bill path and clean.
8	Stacker error or Stacker full..	Inspect for foreign objects in bill box and clean or remove bills in bill box..

If the error can not be solved after corrective actions or happen again, please contact ICT for technical support.